Diritti riservati All rights reserved

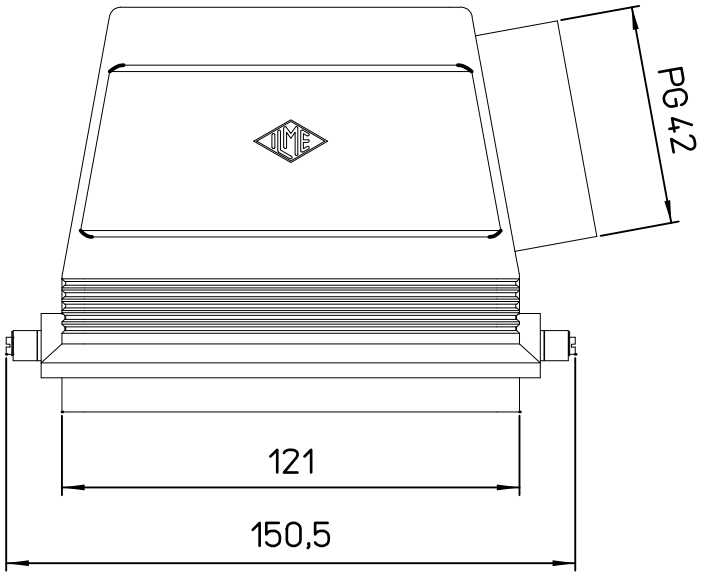

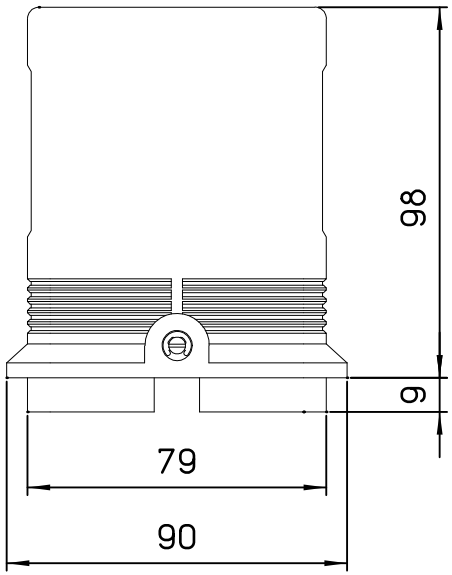

dimensions in mm	CHO 48 L42	Scale	
Date 14/12/06	hood side entry PG42	1:2	
Sign.			